MOMA design

materialofmodernarchitecture

100 % MADE IN MILANO

ECLECTIC

ECLECTIC

I MOBILI “CLASSICI CONTEMPORANEI” DELLA COLLEZIONE ECLECTIC, IN APPOGGIO SU ELEGANTI PIEDI METALLICI, SONO DOTATI DI AMPIO SPAZIO DI CONTENIMENTO, DISTRIBUITO IN UNA SILHOUETTE PIACEVOLMENTE ARROTONDATA. I FRONTALI DI ANTE O CASSETTI, PROPOSTI IN VETRO BRONZATO, IN ESSENZA O LACCATI, SONO ABBINATI A DUE TIMPANI LATERALI SCORREVOLI IN FINITURA CANNETTATA. I TOP SONO DISPONIBILI IN MARMO, IN LEGNO, E IN SOLID SURFACE, SOTTILI O SCATOLATI.

“CLASSIC CONTEMPORARY” FURNITURE FROM THE ECLECTIC COLLECTION , RESTING ON ELEGANT METAL FEET, FEATURES AMPLE STORAGE SPACE, DISTRIBUTED IN A PLEASANTLY ROUNDED SILHOUETTE. DOOR OR DRAWER FRONTS, OFFERED IN BRONZED GLASS, WOOD OR LACQUER, ARE PAIRED WITH TWO SLIDING SIDE GABLES IN A CANNULATED FINISH. TOPS ARE AVAILABLE IN MARBLE, WOOD, AND SOLID SURFACE, THIN OR BOXED.

LES MEUBLES “CLASSIQUES CONTEMPORAINS” DE LA COLLECTION ECLECTIC, REPOSANT SUR D’ÉLÉGANTS PIEDS EN MÉTAL, DISPOSENT DE NOMBREUX ESPACES DE RANGEMENT, DISTRIBUÉS DANS UNE SILHOUETTE AGRÉABLEMENT ARRONDIE. LES FAÇADES DES PORTES OU DES TIROIRS, DISPONIBLES EN VERRE BRONZÉ, EN ESSENCE OU LAQUÉES, SONT ASSOCIÉES À DEUX PIGNONS LATÉRAUX COULISSANTS EN FINITION CANNELÉE. LES PLATEAUX SONT DISPONIBLES EN MARBRE, EN BOIS ET EN SOLID SURFACE, MINCES OU EN CAISSON.

DIE “KLASSISCH-ZEITGENÖSSISCHEN” MÖBEL DER KOLLEKTION ECLECTIC, DIE AUF ELEGANTEN METALLFÜSSEN RUHEN, VERFÜGEN ÜBER REICHLICH STAURAUM, DER IN EINER ANGENEHM ABGERUNDETEN SILHOUETTE VERTEILT IST. DIE FRONTEN DER TÜREN ODER SCHUBLADEN, DIE AUS BRONZIERTEM GLAS, IN ESSENZ ODER LACKIERT ERHÄLTLICH SIND, WERDEN MIT ZWEI SEITLICHEN SCHIEBEGIEBELN IN GERIFFELTER AUSFÜHRUNG KOMBINIERT. DIE TISCHPLATTEN SIND IN MARMOR, HOLZ UND MINERALWERKSTOFF, DÜNN ODER KASTENFÖRMIG, ERHÄLTLICH.

LOS MUEBLES “CLÁSICOS CONTEMPORÁNEOS” DE LA COLECCIÓN ECLECTIC, APOYADOS SOBRE ELEGANTES PATAS METÁLICAS, DISPONEN DE UN AMPLIO ESPACIO DE ALMACENAMIENTO, DISTRIBUIDO EN UNA SILUETA AGRADABLEMENTE REDONDEADA. LOS FRENTES DE PUERTAS O CAJONES, DISPONIBLES EN CRISTAL BRONCEADO, EN ESENCIA O LACADO, SE COMBINAN CON DOS FRONTONES LATERALES DESLIZANTES EN ACABADO ESTRIADO. LAS ENCIMERAS ESTÁN DISPONIBLES EN MÁRMOL, MADERA Y SOLID SURFACE, FINAS O ENCAJONADAS.

previous page:

HAMMAM
SENSITY HAMMAM COMFORT

MOBILE - CABINET
ECLECTIC GLASS 2

TOP
ECLECTIC TOP MARBLE

LAVABO - WASHBASIN
OYSTER MARBLE

SPECCHIO - MIRROR
MIRR FORUM WOOD SABLE'

COMPLEMENTO - FURNITURE PIECE
NICHE V

ACCESSORIO - ACCESSORY
RIVOLO 3 SPECIAL MARBLE

MOBILE - CABINET
ECLECTIC GLASS 2

TOP
ECLECTIC TOP MARBLE

LAVABO - WASHBASIN
OYSTER MARBLE

SPECCHIO - MIRROR
MIRR FORUM WOOD SABLE'

MOBILE - CABINET
ECLECTIC GLASS 2

TOP
ECLECTIC TOP MARBLE

LAVABO - WASHBASIN
OYSTER MARBLE

SPECCHIO - MIRROR
MIRR FORUM WOOD SABLE'

ACCESSORIO - ACCESSORY
RIVOLO 3 SPECIAL MARBLE

MOBILE - CABINET
ECLECTIC GLASS 2

TOP
ECLECTIC TOP MARBLE

LAVABO - WASHBASIN
OYSTER MARBLE

following page:

VASCA - BATHTUB
MIAMI + PANEL ASOLO WOOD

SPECCHIO - MIRROR
MIRR FORUM WOOD SABLE'

COMPLEMENTO - FURNITURE PIECE
NICHE V

VASCA - BATHTUB
MIAMI + PANEL ASOLO WOOD

HAMMAM
SENSITY HAMMAM COMFORT

SOFFIONE - SHOWER HEAD
SQUARE SHOWER + OPTIONALS

ACCESSORIO - ACCESSORY
RIVOLO 3 SPECIAL MARBLE

COMPLEMENTO - FURNITURE PIECE
NICHE V

SPECCHIO - MIRROR
MIRR HIDE ELIPSE VERTICAL

LAVABO - WASHBASIN
TOWER LONDON

ACCESSORIO - ACCESSORY
LINE + LED

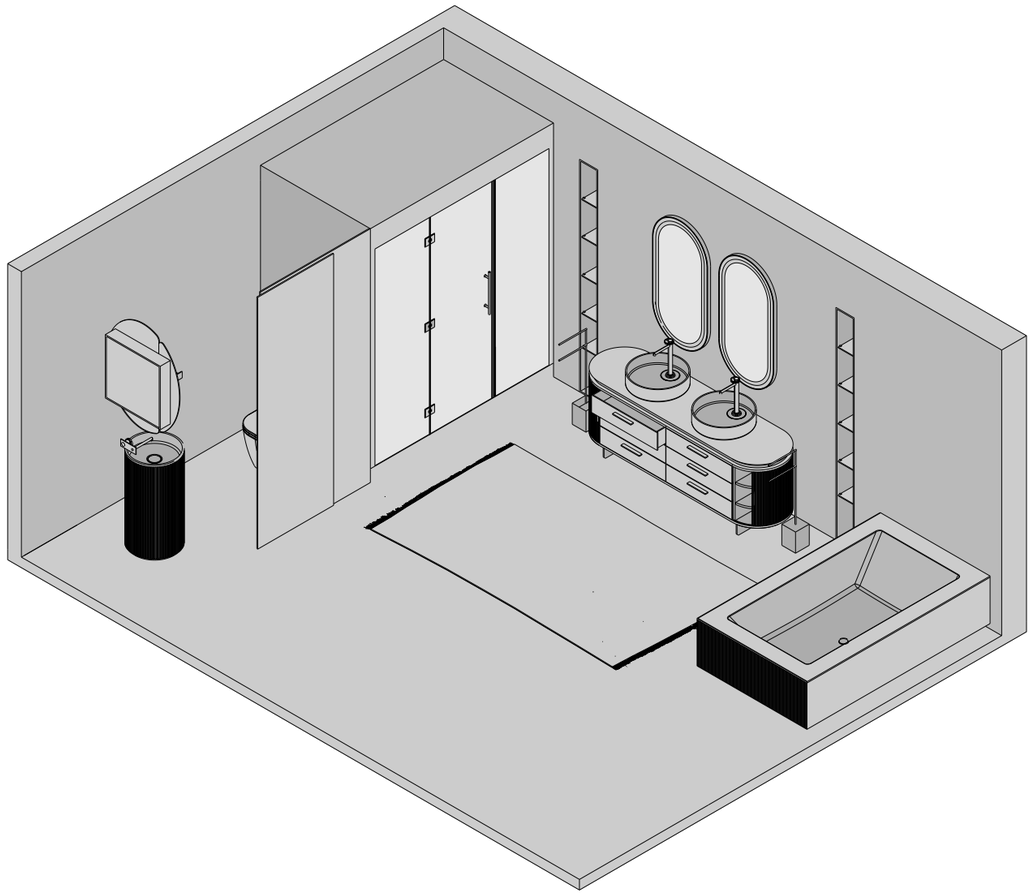

ECLECTIC GLASS 2
ROVERE NATURALE + VETRO BRONZATO
NATURAL OAK + BRONZED GLASS
CHÊNE NATUREL + VERRE BRONZE'
EICHE + RAUCHGLAS
ROBLE NATURAL + CRISTAL AHUMADO
2000 x 550 x H 750 mm
79" x 22" x H 30"

ECLECTIC TOP
MARMO - MARBLE - MARBRE -
MARMOR - MARMOL
M1 NERO MARQUINIA
1200 x x 550 x H 750 mm
47" x 22" H 29"

OYSTER MARBLE
+ INTERNAL MIXER
M1 NERO MARQUINIA
Ø 500 x H 120 mm"
Ø 20" x H 5"

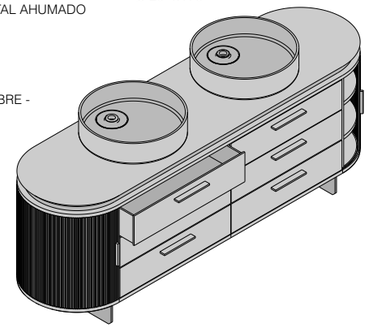

SENSITY HAMMAM COMFORT
+ POLIS
1900 x 1100 x H 60 mm
75" x 43" x H 2"

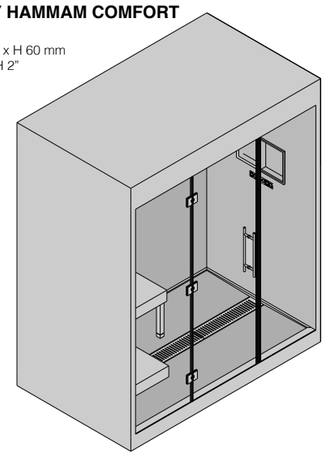

MIAMI + LED
+ PANEL ASOLO 2 SIDES
NATURAL OAK
2000 x 1200 x H 520
79" x 47" x H 20"

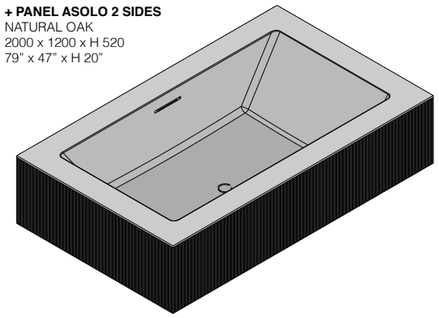

RIVOLO 3 SPECIAL MARBLE
M1 NERO MARQUINIA
270 x 120 x H 850 mm
11" x 5" x H 33"

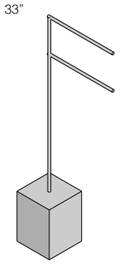

MIRR HIDE ELIPSE VERTICAL
800 x 135 x H 1000 mm
31" x 5" x H 39"

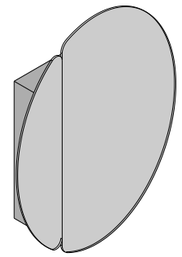

NICHE V + LED
NATURAL OAK
200 x 250 x H 2200 mm
8" x 10" x H 87"

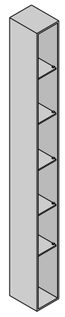

MIRR FORUM WOOD SABLÈ
600 x 19 x H 1200 mm
23" x 1" x H 47"

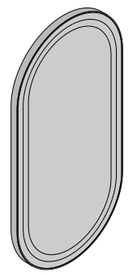

TOWER LONDON
Ø 450 x H 900 mm
Ø 18" x 35"

SQUARE SHOWER + LED
+ SHOWER-IN-SHOWER
+ VERTICAL SHOWERS
650 x 450
25" x 18"

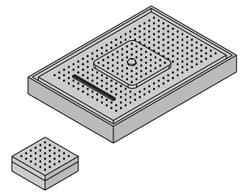

LINE + LED
600 x 80 x H 60 mm
23" x 3" x H 2"

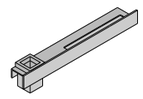

CONTAINER + LED
500 x 80 x H 300 mm
20" x 3" x H 12"

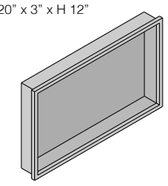

BQUADRO
550 x 360 x H 420 mm
22" x 14" x H 17"

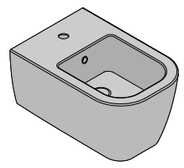

WQUADRO RIMLESS
550 x 360 x H 420 mm
22" x 14" x H 17"

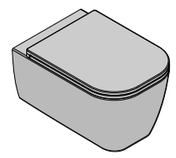

previous page

VASCA - BATHTUB
IVORY + LED & GLASS PANEL

ACCESSORIO - ACCESSORY
TANGRAM STOOL

ACCESSORIO - ACCESSORY
CONTAINER + LED

ACCESSORIO - ACCESSORY
SERVETTO 2 / SERVETTO 3

PIATTO DOCCIA - SHOWER TRAY
SHOWER CASE + LED

BOX DOCCIA - SHOWER CABIN
ST. 502

SOFFIONE - SHOWER HEAD
METEORA

SPECCHIO - MIRROR
MIRR SLIM ROUND SABLE'

MOBILE - CABINET
ECLECTIC 4 SPECIAL

TOP
ECLECTIC BASIN TOP STONAGE + ASOLO
AQUATICO XL 120

VASCA - BATHTUB
IVORY + LED & GLASS PANEL

ACCESSORIO - ACCESSORY
TANGRAM STOOL

SANITARI - SANITARY WARE
WTONDO RIMLESS BTONDO

SANITARI - SANITARY WARE
BTONDO

ACCESSORIO - ACCESSORY
CONTAINER + LED

ACCESSORIO - ACCESSORY
LINE + DOUBLE PAPER HOLDER

ACCESSORIO - ACCESSORY
CONTAINER + LED

ACCESSORIO - ACCESSORY
SERVETTO 2 / SERVETTO 3

PIATTO DOCCIA - SHOWER TRAY
SHOWER CASE + LED

BOX DOCCIA - SHOWER CABIN
ST. 502

SOFFIONE - SHOWER HEAD
METEORA

SOFFIONE - SHOWER HEAD
METEORA

MOBILE - CABINET
ECLECTIC GLASS 3

TOP
ECLECTIC TOP MARBLE

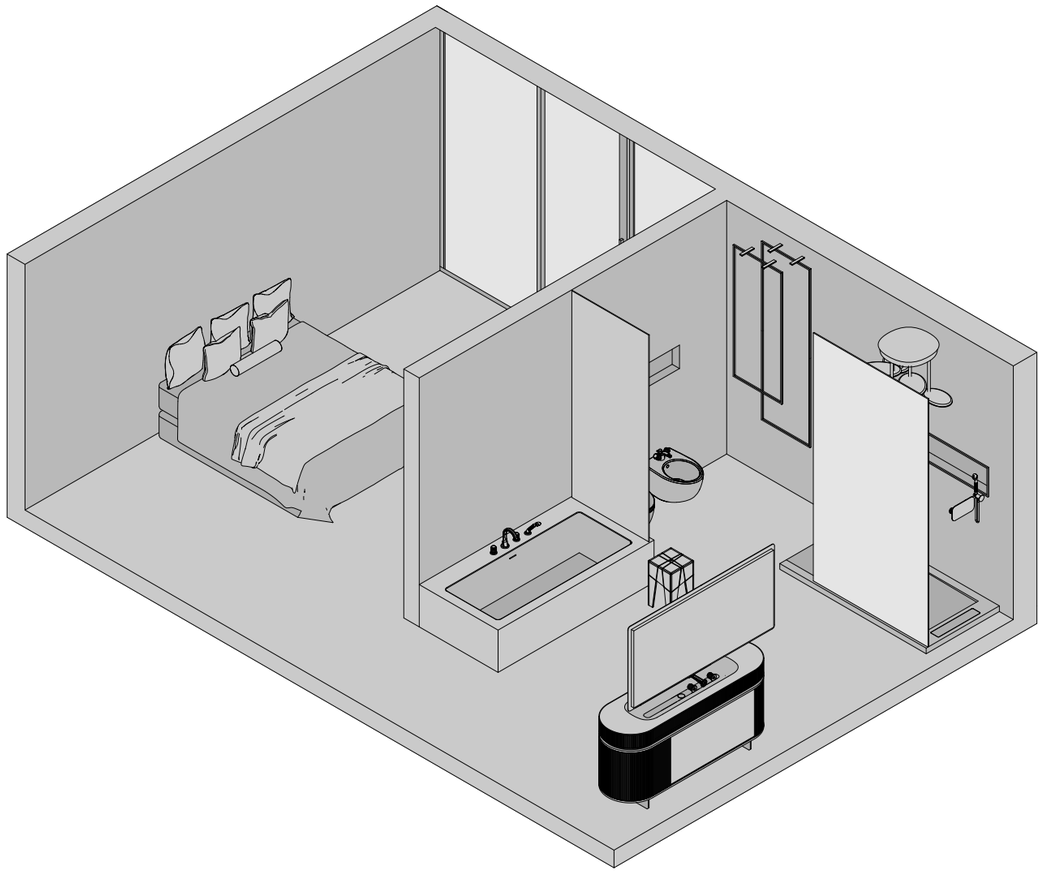

ECLECTIC 3 SPECIAL
NOCE CANALETTO - CANALETTO WALNUT -
NOYER CANALETTO - CANALETTO NUSSHOLZ -
NOGAL CANALETTO
1800 x 550 x H 750 mm
71” x 22” x H 30”

ECLIPSE BASIN TOP
AQUATICO SYSTEM XL
+ ASOLO CANALETTO WALNUT
1800 x 550 x H 150 mm
71” x 22” H 6”

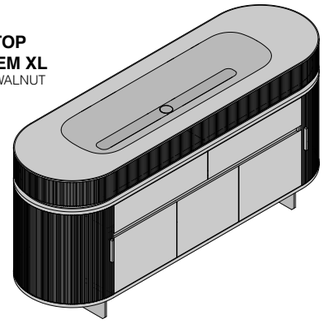

SHOWER CASE + LED + ST. 502
1800 x 900 x H 60 mm
71” x 35” x H 2”

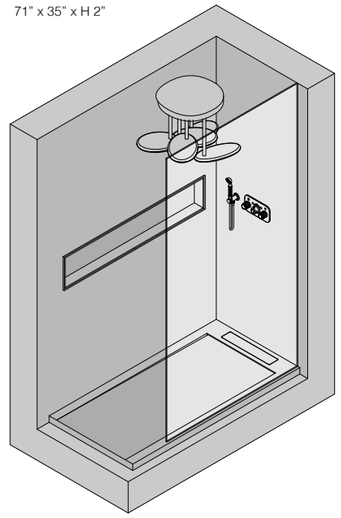

IVORY + LED
1920 x 960 x H 520
75” x 38” x H 20”

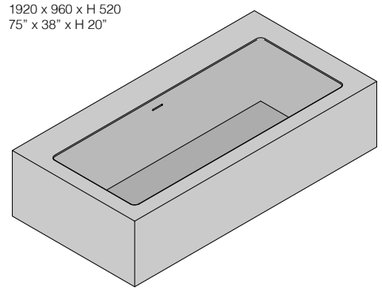

METEORA 5 PETALS + LED
760 x 565 x H 530 mm
30” x 22” x H 21”

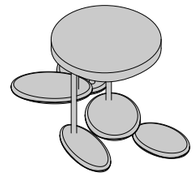

ECLECTIC GLASS 3
+ ECLECTIC TOP
MARMO - MARBLE - MARBRE -
MARMOR - MARMOL
M3 PATAGONIA
1200 x x 550 x H 750 mm
47” x 22” H 29”

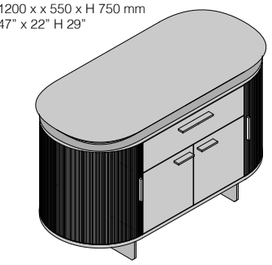

SERVETTO 2
600 x H 1400 mm
23” x H 55”

SERVETTO 3
600 x H 1900 mm
23” x H 75”

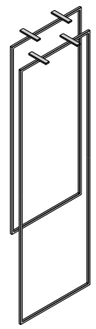

MIRR SLIM ROUND SABLE’
1800 x 35 x H 900 mm
71” x 1” x H 35”

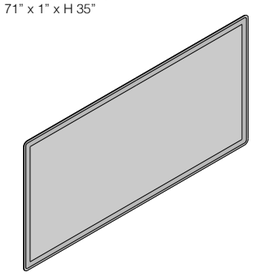

CONTAINER + LED
1200 x 80 x H 300 mm
47” x 3” x H 12”

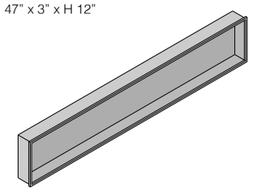

TANGRAM STOOL
280 x 280 x H 470 mm
11” x 11” x H 18”

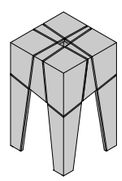

BTONDO
530 x 360 x H 420 mm
21” x 14” x H 17”

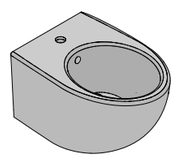

WTONDO RIMLESS
530 x 360 x H 420 mm
21” x 14” x H 17”

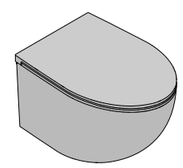

previous page:

PIATTO DOCCIA - SHOWER TRAY
SHOWER CASE

BOX DOCCIA - SHOWER CABIN
ST. 502

SOFFIONE - SHOWER HEAD
SOLID SHOWER CUBIC

ACCESSORIO - ACCESSORY
CONTAINER + LED

SPECCHIO - MIRROR
MIRR OUTLINE 1

MOBILE - CABINET
ECLECTIC GLASS 1

TOP
ECLECTIC TOP WOOD

LAVABO - WASHBASIN
JUMP 3 MARBLE

PIATTO DOCCIA - SHOWER TRAY
SHOWER CASE

BOX DOCCIA - SHOWER CABIN
ST. 502

SOFFIONE - SHOWER HEAD
SOLID SHOWER CUBIC

ACCESSORIO - ACCESSORY
CONTAINER + LED

SPECCHIO - MIRROR
MIRR OUTLINE 1

MOBILE - CABINET
ECLECTIC GLASS 1

TOP
ECLECTIC TOP WOOD

LAVABO - WASHBASIN
JUMP 3 MARBLE

LAVABO - WASHBASIN
TOWER PALACE 1

SPECCHIO - MIRROR
MIRR SLIM SQUARE SABLE'

SANITARI - SANITARY WARE
WQUADRO RIMLESS

COMPLEMENTO - FURNITURE PIECE
NICHE V

ACCESSORIO - ACCESSORY
CONTAINER + LED

LAVABO - WASHBASIN
TOWER PALACE 1

SPECCHIO - MIRROR
MIRR SLIM SQUARE SABLE'

COMPLEMENTO - FURNITURE PIECE
NICHE V

VASCA - BATHTUB
PLATINUM

ACCESSORIO - ACCESSORY
CONTAINER + LED

VASCA - BATHTUB
PLATINUM

ACCESSORIO - ACCESSORY
CONTAINER + LED

LAVABO - WASHBASIN
TOWER PALACE 1

SPECCHIO - MIRROR
MIRR SLIM SQUARE SABLE'

COMPLEMENTO - FURNITURE PIECE
NICHE V

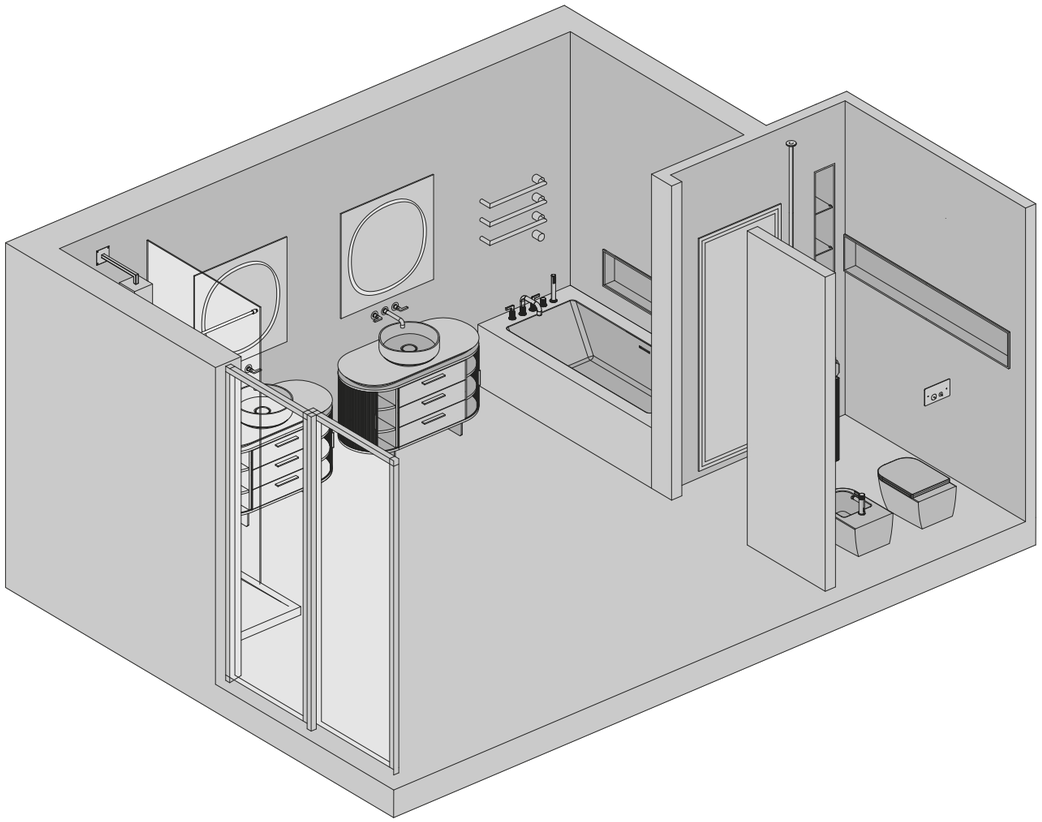

ECLECTIC GLASS 1
ASOLO LACCATO OPACO PETROLIO 603 + VETRO BRONZATO
ASOLO MATT LACQUERED + BRONZED GLASS
ASOLO LAQUÉ MAT + VERRE BRONZE'
MATTLACKIERTER ASOLO + RAUCHGLAS
LACADO MATE ASOLO + CRISTAL AHUMADO
1200 x 550 x H 750 mm
47" x 22" x H 30"

ECLECTIC TOP
MARMO - MARBLE - MARBRE -
MARMOR - MARMOL
M1 GREY STONE
1200 x x 550 x H 750 mm
47" x 22" H 29"

JUMP 3 MARBLE
M1 GREY STONE
Ø 450 x H 150 mm
Ø 18" x H 6"

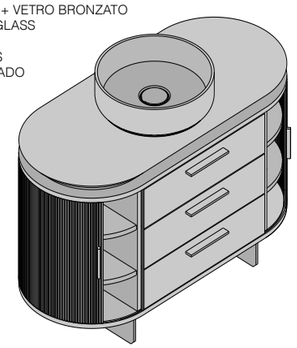

SHOWER CASE + ST. 502
1800 x 900 x H 60 mm
71" x 35" x H 2"

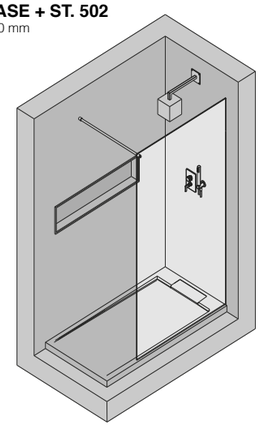

PLATINUM
2000 x 900 x H 520
79" x 35" x H 20"

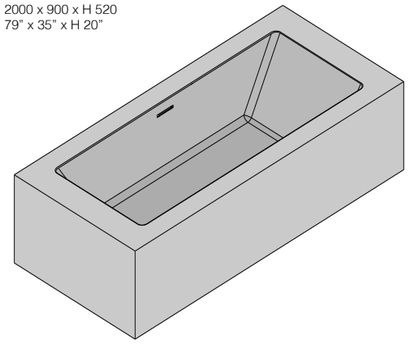

TOWER PALACE 1
ASOLO MATT LACQUERED PETROLIO 605
450 x 450 x H 870 mm
18" x 18" x H 34"

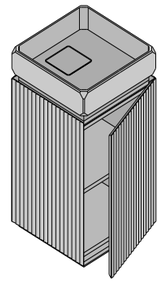

MIRR OUTLINE 1
900 x 35 x H 900 mm
35" x 1" x H 35"

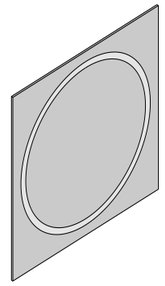

NICHE V + LED
STONAGE
250 x 250 x H 2200 mm
10" x 10" x H 87"

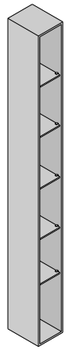

CONTAINER + LED
1400 x 80 x H 300 mm
55" x 3" x H 12"

CONTAINER + LED
1200 x 80 x H 300 mm
47" x 3" x H 12"

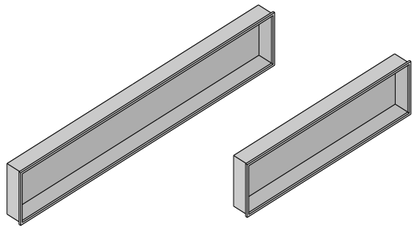

MIRR SLIM SABLE'
800 x 35 x H 2000 mm
31" x 3" x H 79"

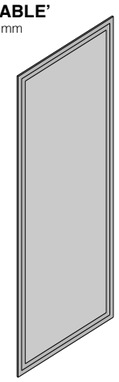

SOLID SHOWER CUBIC
175 x 175 x H 175 mm
7" x 7" x H 7"

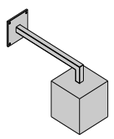

RIVOLO 3
MATT LACQUERED
PETROLIO 603
270 x 120 x H 850 mm
11" x 5" x H 33"

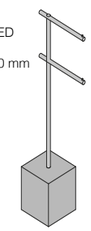

BQUADRO
550 x 360 x H 420 mm
22" x 14" x H 17"

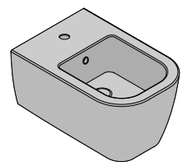

WQUADRO RIMLESS
550 x 360 x H 420 mm
22" x 14" x H 17"

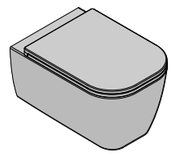

previous page:

COMPLEMENTO - FURNITURE PIECE
NICHE V

PIATTO DOCCIA - SHOWER TRAY
METRO

SOFFIONE - SHOWER HEAD
SHOWER WALL + LED

ACCESSORI - ACCESSORIES
CONTAINER + LED

MOBILE - CABINET
ECLECTIC 2

TOP
ECLECTIC BASIN TOP
AQUATICO SYSTEM XL

SPECCHIO - MIRROR
MIRR MOON

SANITARI - SANITARY WARE
WTONDO RIMLESS / BTONDO

ACCESSORIO - ACCESSORY
LINE + PAPER HOLDER

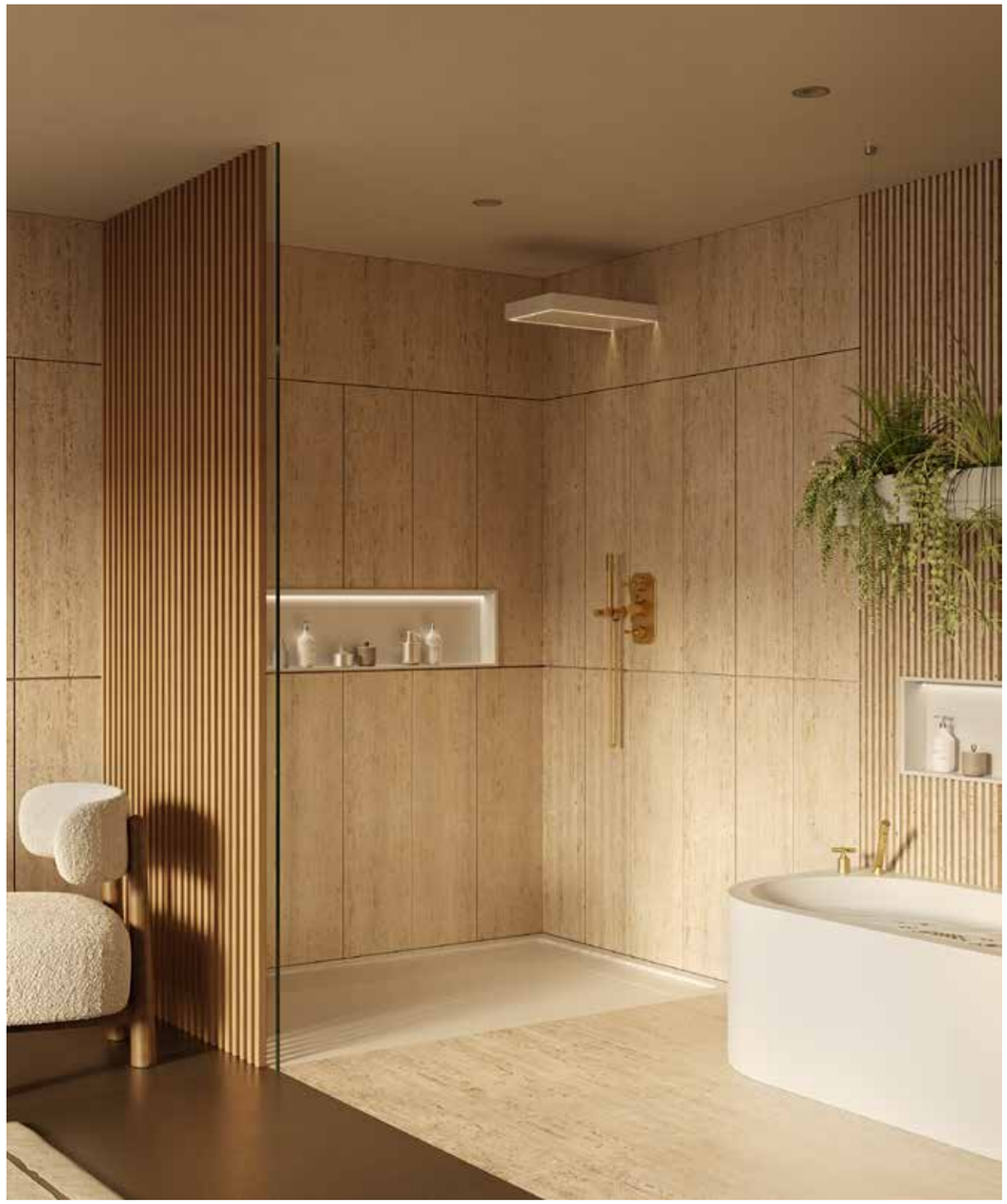

PIATTO DOCCIA - SHOWER TRAY
METRO

SOFFIONE - SHOWER HEAD
SHOWER WALL + LED

ACCESSORI - ACCESSORIES
CONTAINER + LED

VASCA - BATHTUB
SAPPHIRE WALL

VASCA - BATHTUB
SAPPHIRE WALL

ACCESSORIO - ACCESSORY
CONTAINER + LED

ACCESSORIO - ACCESSORY
LINE

ACCESSORIO - ACCESSORY
LINE + PAPER HOLDER

SANITARI - SANITARY WARE
WTONDO RIMLESS / BTONDO

VASCA - BATHTUB
SAPPHIRE WALL

ACCESSORI - ACCESSORIES
CONTAINER + LED

PIATTO DOCCIA - SHOWER TRAY
METRO

ACCESSORI - ACCESSORIES
CONTAINER + LED

MOBILE - CABINET
ECLECTIC 2

TOP
ECLECTIC BASIN TOP
AQUATICO SYSTEM XL

SPECCHIO - MIRROR
MIRR MOON

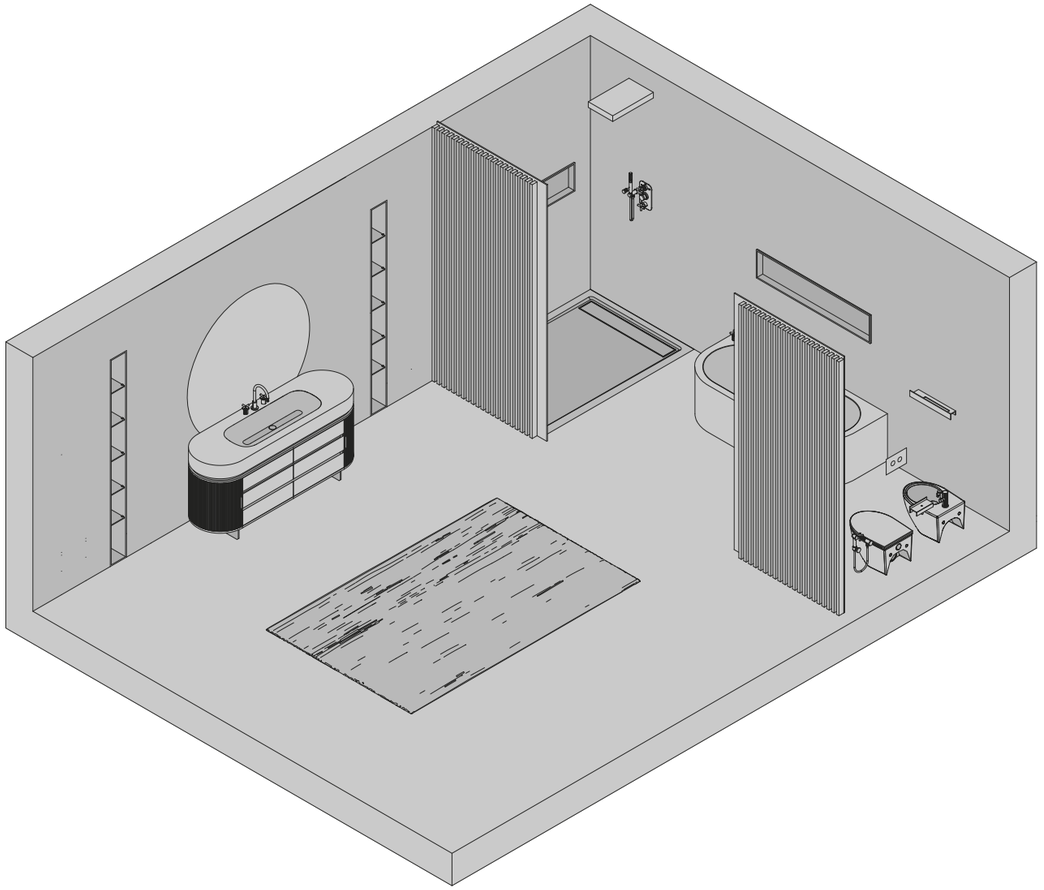

ECLECTIC 2
ROVERE NATURALE - NATURAL OAK - CHÊNE NATUREL EICHE - ROBLE NATURAL
1800 x 550 x H 750 mm
71” x 22” x H 30”

ECLECTIC BASIN TOP AQUATICO SYSTEM XL
1800 x 550 x H 150 mm
71” x 22” H 6”

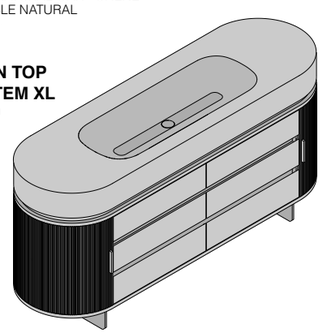

METRO
1900 x 1000 x H 60 mm
75” x 39” x H 2”

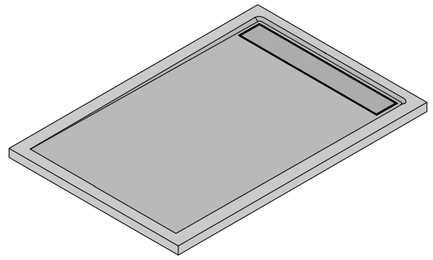

SAPPHIRE WALL P. 800
1800 x 800 x H 500 mm
71” x 31” x H 20”

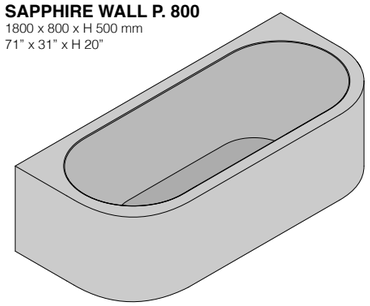

MIRR MOON
Ø 1500 x 35 mm
Ø 23” x 1” x H 47”

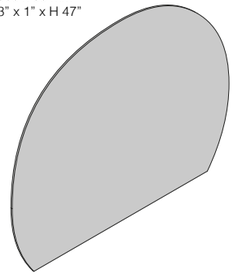

NICHE V + LED
NATURAL OAK
250 x 250 x H 2200 mm
10” x 10” x H 87”

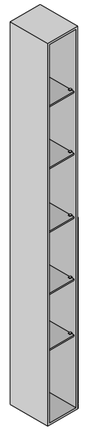

CONTAINER + LED
1400 x 80 x H 300 mm
55” x 3” x H 12”

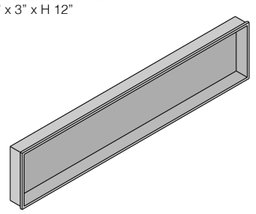

SHOWER WALL + LED
500 x 300 x H 60 mm
20” x 12” x H 2”

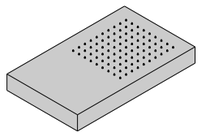

LINE
600 x 80 x H 60 mm
24” x 3” x H 2”

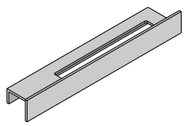

LINE + PAPER HOLDER
300 x 80 x H 60 mm
12” x 3” x 2”

BTONDO
530 x 360 x H 420 mm
21” x 14” x H 17”

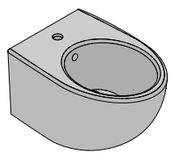

WTONDO RIMLESS
530 x 360 x H 420 mm
21” x 14” x H 17”

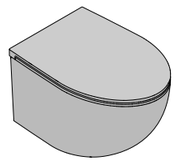

previous page

PIATTO DOCCIA - SHOWER TRAY
TOLOMEO

BOX DOCCIA - SHOWER CABIN
ST. 103 SPECIAL

ACCESSORI - ACCESSORIES
SHOWER BENCH

SPECCHIO - MIRROR
MIRR WOOD LED

ACCESSORIO - ACCESSORY
RIVOLO 3 SPECIAL MARBLE

MOBILE - CABINET
ECLECTIC 1

TOP
ECLECTIC TOP STONAGE

LAVABO - WASHBASIN
SEMI-RECESSED BASIN OUT OF CATALOG

PIATTO DOCCIA - SHOWER TRAY
TOLOMEO

BOX DOCCIA - SHOWER CABIN
ST. 103 SPECIAL

SOFFIONI - SHOWERHEADS
SQUARE SHOWER / MULTISHOWER

ACCESSORI - ACCESSORIES
SHOWER BENCH

ACCESSORIO - ACCESSORY
RIVOLO 3 SPECIAL MARBLE

ACCESSORIO - ACCESSORY
LINE / LINE + DOUBLE PAPER HOLDER

SANITARI - SANITARY WARE
WQUADRO RIMLESS / BQUADRO

VASCA - BATHTUB
JADE

ACCESSORIO - ACCESSORY
CONTAINER + LED

COMPLEMENTO - FURNITURE PIECE
NICHE V

ACCESSORIO - ACCESSORY
LINE + DOUBLE PAPER HOLDER

SANITARI - SANITARY WARE
WQUADRO RIMLESS / BQUADRO

VASCA - BATHTUB
JADE

ACCESSORIO - ACCESSORY
CONTAINER + LED

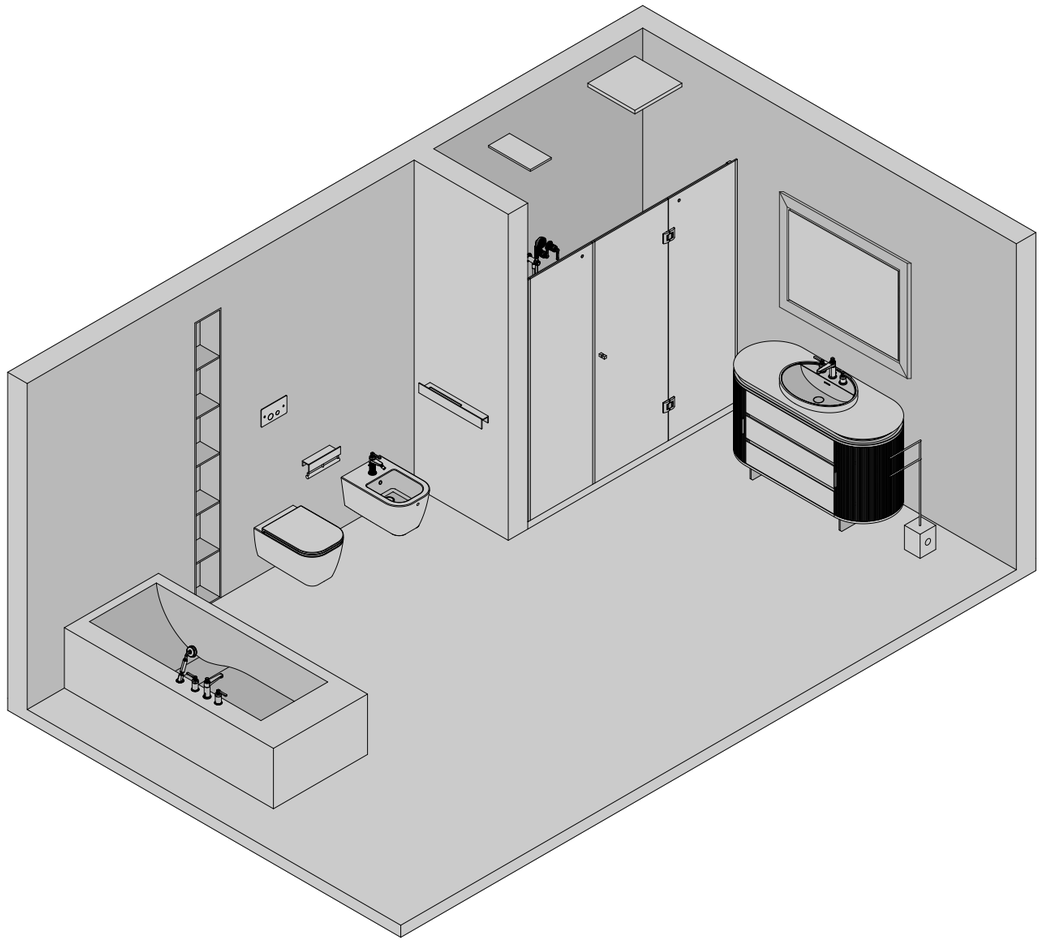

ECLECTIC 1
ASOLO LACCATO OPACO CIPRIA 105
ASOLO MATT LACQUERED - ASOLO LAQUÉ MAT
MATTLACKIERTER ASOLO - LACADO MATE ASOLO
1400 x 550 x H 750 mm
55” x 22” x H 30”

LAVABO OVALE SEMINCASSO FUORI CATALOGO
SEMI-RECESSED BASIN OUT OF CATALOG
600 x 450 mm
24” x 18”

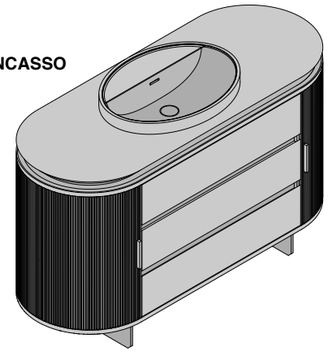

TOLOMEO + ST. 103 SPECIAL
STONAGE
2000 x 900 x H 60 mm
79” x 35” x H 2”

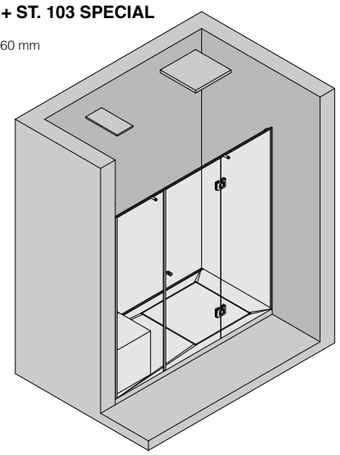

JADE
2000 x 900 x H 500 mm
79” x 35” x H 20”

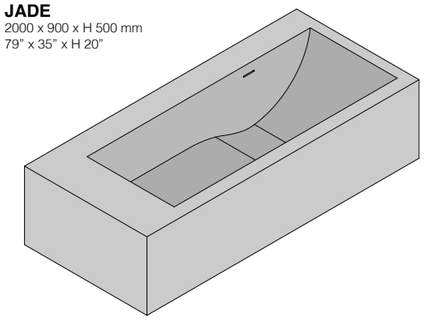

MIRR WOOD LED
MATT LACQUERED CIPRIA 105
1400 x 20 x H 900 mm
55” x 1” x H 35”

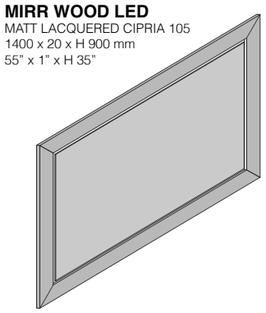

NICHE V + LED
STONAGE
250 x 250 x H 900 mm
10” x 10” x H 35”

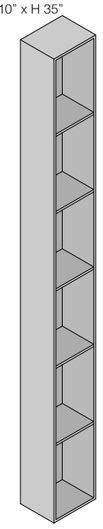

SQUARE SHOWER + LED
MULTISHOWER + LED
450 x 450 mm
18” x 18”

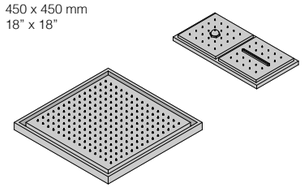

LINE
600 x 80 x H 60 mm
24” x 3” x H 2”

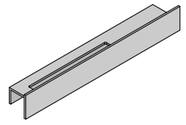

RIVOLO 3 SPECIAL MARBLE
M1 NERO MARQUINIA
270 x 120 x H 850 mm
11” x 5” x H 33”

LINE + PAPER HOLDER
300 x 80 x H 60 mm
12” x 3” x 2”

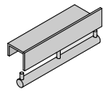

SHOWER BENCH
500 x 350 x H 480 mm
20” x 14” x H 19”

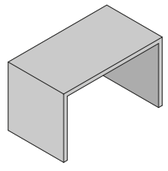

BQUADRO
550 x 360 x H 420 mm
22” x 14” x H 17”

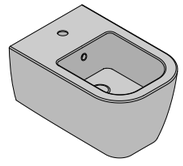

WQUADRO RIMLESS
550 x 360 x H 420 mm
22” x 14” x H 17”

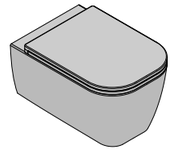

MATERIALS

LACCATO OPACO / Matt lacquering / Laquage mat / Matte Lackierung / Lacado opaco

LACCATO LUCIDO / Glossy Lacquering / Laquage brillant / Hochglanz Lackierung / Lacado lucido

Bianco	030	Nero	085		
Nuvola	200	Neutro	350	Grafite	450
Piombo	500	Antracite	700		
Zucchero	252	Cashmere	255	Mohair	305
Cemento	505	Asfalto	705		
Cipria	105	Champagne	205	Creta	405
Fango	605	Ardesia	805		
Pupetta	051	Antico	203	Corallo	057
Velluto	356	Sunset	257		
Quarzo	301	Salvia	501	Ulivo	703
Avocado	354	Giove	207		
Aquamarina	059	Pastello	103	Oltremare	365
Petrolio	603	Profondo	709		

SOLID SURFACE

White Stonage MWS

Corian ® Glacier White CGV

MARMO / Marble / Marbre / Marmor / Marmol

Travertino stuccato (M1) MTV

Zecevo (M1) MZE

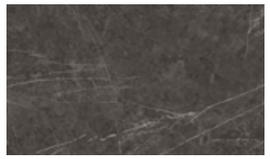

Grey Stone (M1) MGS

Marquina Black (M1) MMB

Carrara Extra (M2) MCE

Calacatta Gold (M2) MCG

Patagonia (M3) MPT

Altre finiture su richiesta
Other finishes on request
Autres finitions sur demande
Andere Finish auf Wunsch
Otres acabados a pedido

GRES / Porcelain stoneware / Grès cérame / Steinzeug / Grés porcelanico

Statuario Lux GSL

Calacatta Gold GCG

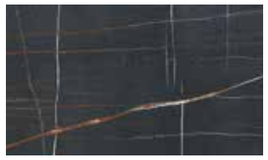

Sahara Noir GSN

Frappuccino L. GFL

Ceppo di Gré Grey S. GCGG

Grigio Carnico L. GGC

Limestone Ivory GLI

Altre finiture su richiesta
Other finishes on request
Autres finitions sur demande
Andere Finish auf Wunsch
Otres acabados a pedido

ESSENZE "A " / Timber "A" / Bois "A" / Holzarten "A" / Maderas "A"

Rovere Naturale **EON**
Natural Oak / Chêne Naturel
Eiche / Roble Natural

ESSENZE "B " / Timber "B" / Bois "B" / Holzarten "B" / Maderas "B"

Rovere Bianco **EWO**
White Oak / Chêne Blanc
Eiche Weiss / Roble Blanco

Rovere Tabacco **EOT**
Tobacco Oak / Chêne Tabac
Tabakbraune Eiche / Roble
Tabaco

Rovere Grigio **EOG**
Grey Oak / Chêne Gris
Eiche Grau / Roble Gris

Noce Canaletto **ENC**
Canaletto Walnut / Noyer Canaletto
Canaletto Nussholz / Nogal Canaletto

ESSENZE "C " / Timber "C" / Bois "C" / Holzarten "C" / Maderas "C"

Ebano **EBN**
Ebony / Ebenholz
Ebène / Ebano

Palissandro **ERW**
Rosewood / Palissandre
Rosenholz / Palo de rosa

Wengè **EWG**
Wengé / Wengé
Wengé / Wengé

MASSELLO / Solid Wood / Bois Massif / Massivholz / Madera maciza

Teak **TTK**

ESSENZE LEGNI NATURALI / Wood Veneers / Bois Plaqués / Furniertes Holz / Maderas

Abete Vintage **ABV**

PANNELLI FRESATI / Milled Panels / Panneaux Fraisés / Gefräste Platten / Paneles Molidos

Noce Canaletto / Canaletto Walnut / Noyer Canaletto / Canaletto Nussholz / Nogal Canaletto
Rovere Naturale / Natural Oak / Chêne Naturel / Eiche / Roble natural
MDF laccato opaco / MDF matt lacquered / MDF laqué mat / MDF matt lackiert / MDF lacado opaco

Asolo **ASS**

Per base lavabi Tower, per rivestimento top e timpani mobili Eclipse ed Eclectic
For Tower washbasins base, for Eclipse and Eclectic tops and gables
Pour bases Tower, pour plans et latéraux Eclipse et Eclectic
Für Tower-Säulenwaschtische, für Eclipse und Eclectic Top und Giebeln
Para base de lavabo Tower, para encimeras y lados muebles Eclipse y Eclectic

Firenze **FIZ**

Per base Tower Palace
For base Tower Palace
Pour base Tower Palace
Für Seiten Tower Palace
Para base de Tower Palace

Parigi **PAR**

Solo per Tower modello Paris
For tower washbasin model Paris only
Uniquement pour vasque colonne modèle Paris
Nur für Säulenwaschtisch Modell Paris
sólo para lavabo modelo Tower Paris

ALLUMINIO VERNICIATO A POLVERE / Powder coated aluminium / Aluminium verni a poudre / Staublackierter Aluminium / Aluminio pintado con polvo

Per strutture portanti di mobili Eclipse, Eclectic, Excellent e per accessori Rivolo, Line
For suppoorting structures of Eclipse, Eclectic, Excellent and for Rivolo and Line accessories
Pour structures de soutien de Eclipse, Eclectic, Excellent et pour accessoires Rivolo et Line
Für Strukturen Eclipse, Eclectic, Excellent und für Zubehore Rivolo und Line
Para estructuras Eclipse, Eclectic, Excellent y para acesorios Rivolo y Line

Oro / Gold

Argento / Silver

Bronzo Antico / Antique Bronze

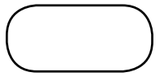

Bianco / White

Bronzo / Bronze

Nero / Black

MOMA Design S.r.l.

Via Giovanni Falcone 42
20008 Bareggio (MI) - Italy

Tel. +39 02 90361225
Fax. +39 02 90361239

www.moma-design.it
info@momadesign.it
www.stonage-international.com

Cod. Fisc. / P.IVA 10148470155
C.C.I.A.A. Milano n° 1348295
Iscr. Trib. Milano 308629/7754/29
Cap. Soc. i.v. € 10.400,00

www.moma-design.com